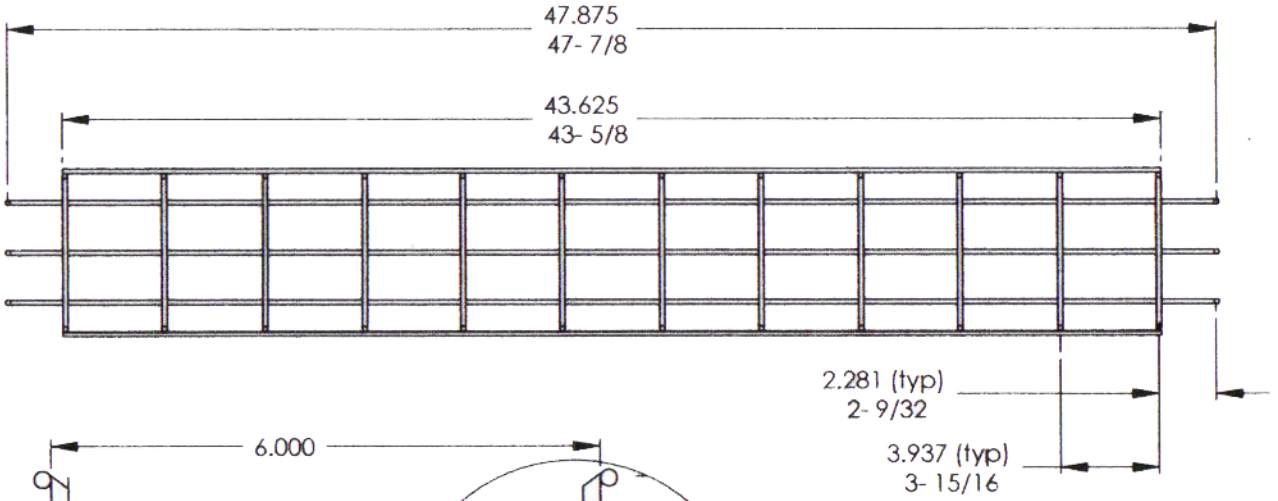

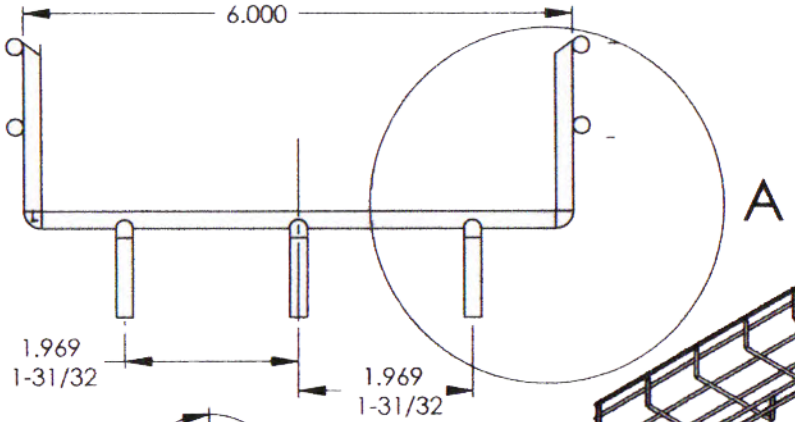

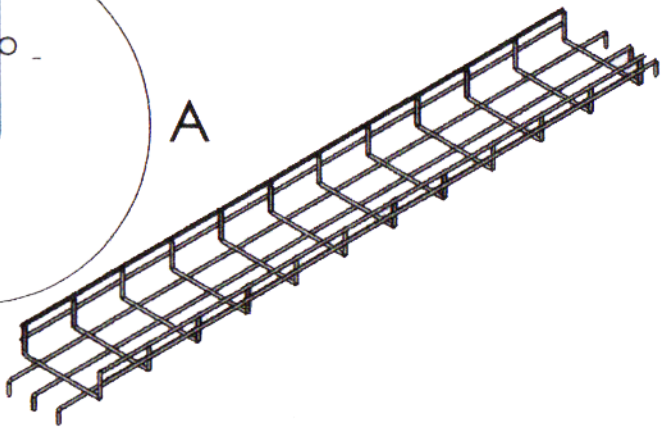

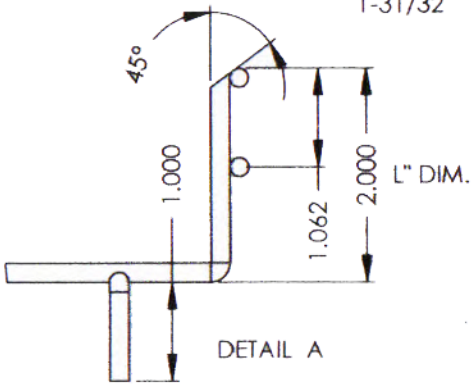

COMPONENT LIST			
L" DIM.	ITEM	MAKE FROM	DESCRIPTION
		P/N FT XX 6X48	CO WIRE .196 DIA.
2"		2X6X48	
4"		4X6X48	
6"		6X6X48	

GENERAL NOTES:

A) MATERIAL TO BE DIPPED, PRE-GALVANIZED STEEL, TO AVOID THE FORMATION OF ZINC WISKERS.

B) FINISH (CARBON STEEL WIRE ONLY).
1) POLYESTER POWDER COATING 1.2 - 3.0 MILS THICK.

C) DIMENSIONAL TOLERANCES
1) GENERAL DIMENSIONS +/- 1/8" U.N.D.
2) LENGTH +/- 1/4"
3) WIDTH +/- 1/8"
4) DEPTH +/- 1/8"
5) ANGULAR FORMATION +/- 3 DEG.
6) CAMBER SHALL NOT EXCEED 1/2" ON STANDARD 10' LENGTH.
7) TWIST SHALL NOT EXCEED 1/2" ON STANDARD 10' LENGTH

D) RIB VICE DIAMETER
1) .197 (5MM) DIAMETER.

E) LONGITUDINAL WIRE DIAMETER.
1) .197 (5MM) DIAMETER

F) CROSS SECTION AREA
AREA = (20 WIRES X .0438 IN2)= .876 IN2
UL MARKING = .8 IN2

UNLESS OTHERWISE SPECIFIED:
DIMENSIONS ARE IN inches.

DEBUR AND BREAK SHARP EDGES

REVISION	NAME	CHANGE	DATE
A	AF		5-12-10

MATERIAL:

WEIGHT:

ACCESS CABLE TRAYS
A Product of IRVINE ACCESS FLOORS

TITLE: FLOORFLEX-TRAY

DWG NO. FT XX 6 X 48

SHEET 1 OF 1